REMOVAL

1. DISCHARGE REFRIGERANT FROM REFRIGERATION SYSTEM (See page AC-10)

2. DISCONNECT SUCTION HOSE SUB-ASSEMBLY

(a) Install SST to the piping clamp.
SST 09870-00015
HINT:
Confirm the direction of the piping clamp claw and SST using the illustration showing on the caution label.

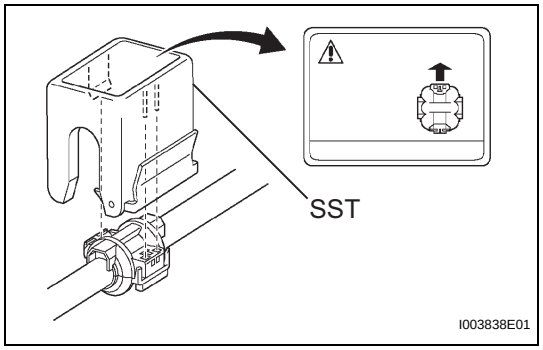

(b) Push down SST and release the clamp lock.
NOTICE:
Be careful not to deform the tube when pushing SST.

(c) Pull SST slightly and push the release lever, then remove the piping clamp with SST.

(d) Remove the piping clamp from SST.

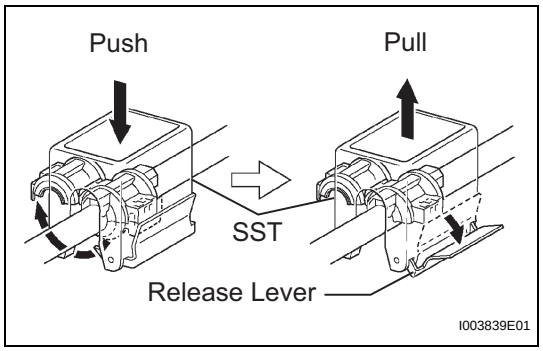

(e) Disconnect the cooler refrigerant suction hose No. 1.
NOTICE:
- **Do not use tools like a screwdriver to remove the tube.**
- **Cap the open fittings immediately to keep moisture or dirt out of the system.**

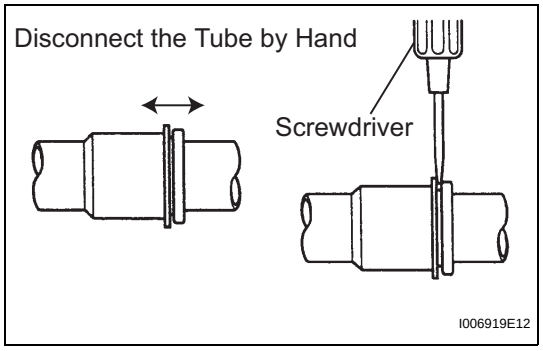

3. DISCONNECT AIR CONDITIONING TUBE ASSEMBLY
SST 09870-00015
HINT:
Disconnect in the same way as the cooler refrigerant suction hose No. 1.

4. DISCONNECT HEATER INLET WATER HOSE

(a) Using pliers, grip the claws of the clip and slide the clip and disconnect the heater inlet water hose.

5. DISCONNECT HEATER OUTLET WATER HOSE
HINT:
Disconnect in the same way as the heater inlet water hose.

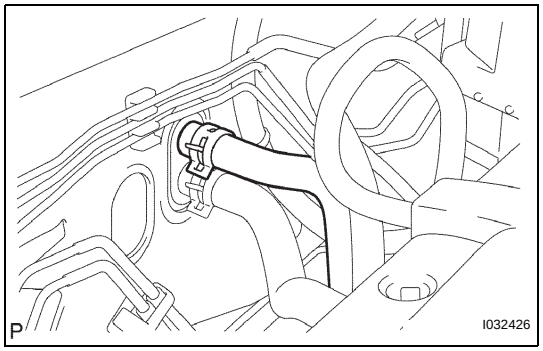

6. REMOVE LOWER INSTRUMENT PANEL SUB-ASSEMBLY (See page IP-10)

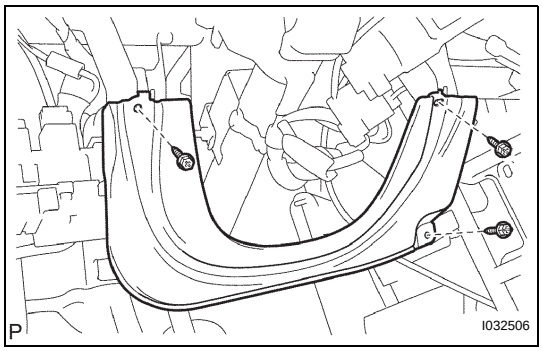

7. REMOVE INSTRUMENT PANEL LOWER PAD INSERT LH

(a) Remove the 3 screws and instrument panel lower pad insert LH.

8. REMOVE INSTRUMENT PANEL LOWER MOUNT BRACKET NO. 1

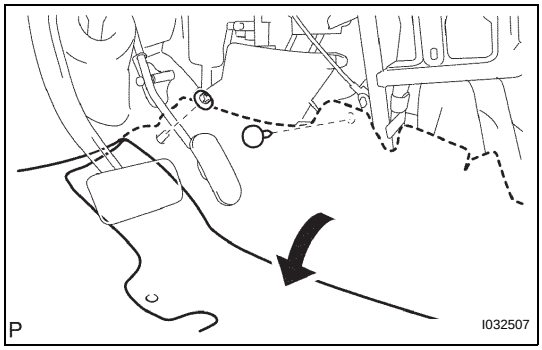

9. REMOVE INSTRUMENT PANEL BRACE SUB-ASSEMBLY NO. 1

(a) Remove the 2 clips and take up the floor carpet.
HINT:
Take up the floor carpet as small as the instrument panel brace sub-assembly No. 1 can be removed.

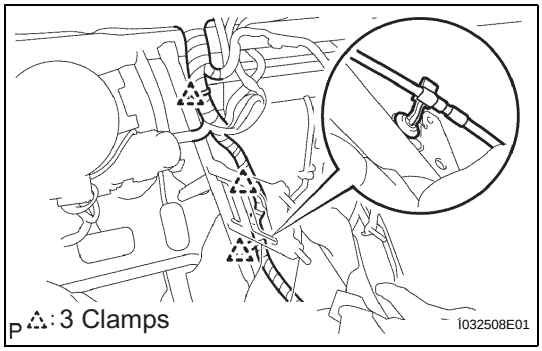

(b) Remove the 3 clamps and floor shift parking lock cable assembly.

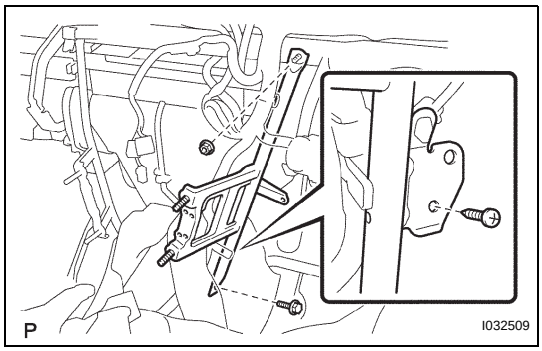

(c) Remove the screw.

(d) Remove the bolt, nut and instrument panel brace sub-assembly No. 1.

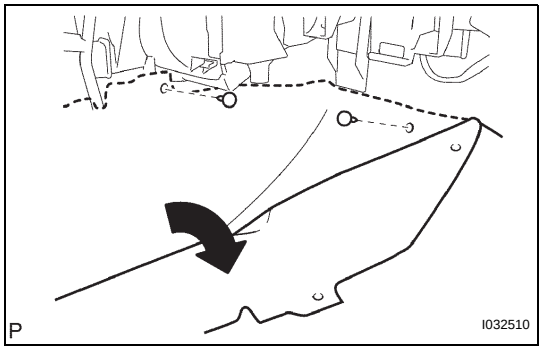

10. REMOVE INSTRUMENT PANEL BRACE SUB-ASSEMBLY NO. 2

(a) Remove the 2 clips and take up the floor carpet.
HINT:
Take up the floor carpet as small as the instrument panel brace sub-assembly No. 2 can be removed.

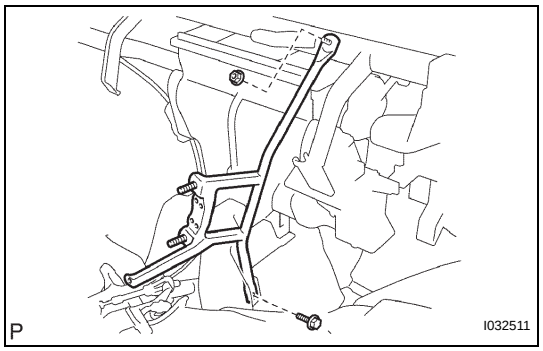

(b) Remove the bolt, nut and instrument panel brace sub-assembly No. 2.

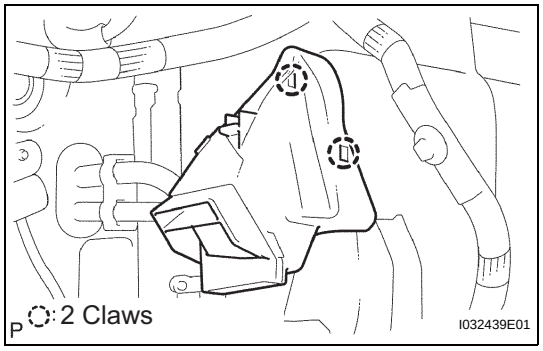

11. REMOVE AIR DUCT NO. 1

(a) Release the 2 fitting claws and remove the air duct No. 1.

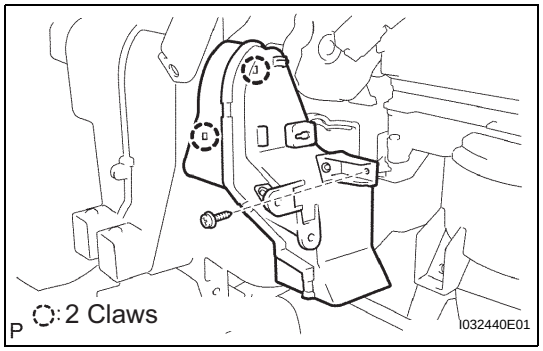

12. REMOVE AIR DUCT NO. 2

(a) Remove the screw.

(b) Release the 2 fitting claws and remove the air duct No. 2.

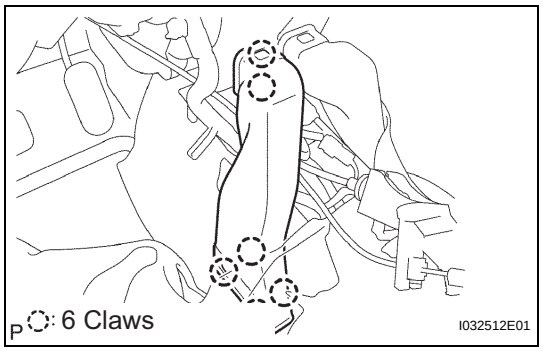

13. REMOVE AIR DUCT REAR NO. 3 (for Cold Area Specification Vehicles)

(a) Release the 6 fitting claws and remove the air duct rear No. 3.

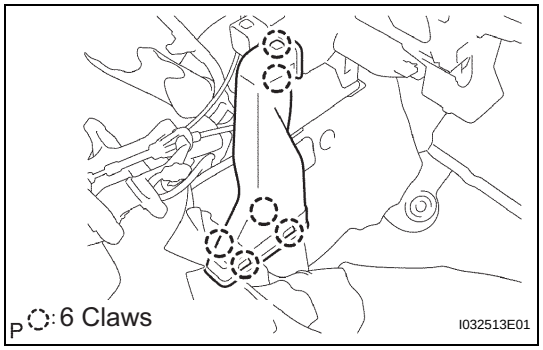

14. REMOVE AIR DUCT REAR NO. 4 (for Cold Area Specification Vehicles)

(a) Release the 6 fitting claws and remove the air duct rear No. 4.

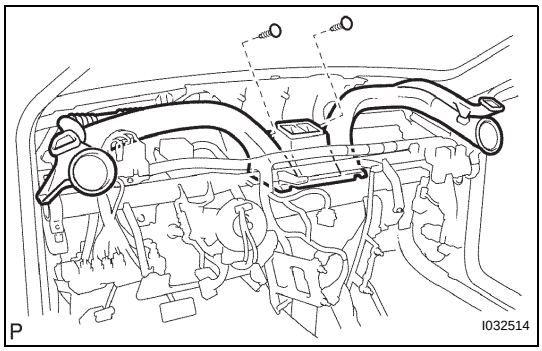

15. REMOVE HEATER TO REGISTER DUCT NO. 1

(a) Remove the 2 clips and heater to register duct No. 1.

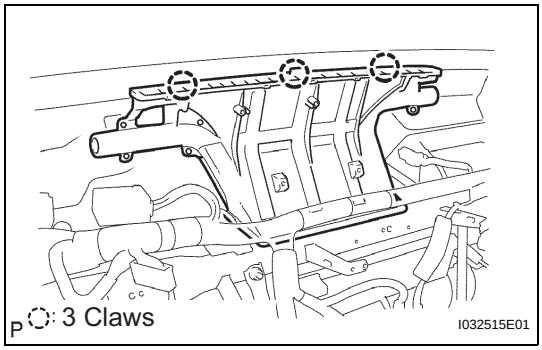

16. REMOVE DEFROSTER NOZZLE ASSEMBLY

(a) Release the 3 fitting claws and remove the defroster nozzle assembly.

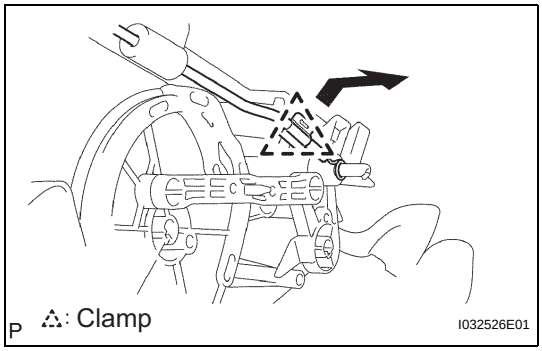

17. DISCONNECT DEFROSTER DAMPER CONTROL CABLE SUB-ASSEMBLY

(a) Disconnect the outer cable from the clamp.

(b) Disconnect the inner cable and defroster damper control cable sub-assembly.

NOTICE:

- **Be careful not to bend the cable wire.**
- **If the cable wire bends, the air conditioning control assembly operationality becomes worse.**

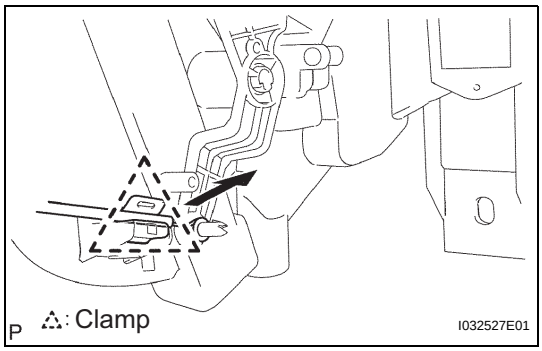

18. DISCONNECT AIRMIX DAMPER CONTROL CABLE SUB-ASSEMBLY

(a) Disconnect the outer cable from the clamp.

(b) Disconnect the inner cable and airmix damper control cable sub-assembly.

NOTICE:

- **Be careful not to bend the cable wire.**
- **If the cable wire bends, the air conditioning control assembly operationality becomes worse.**

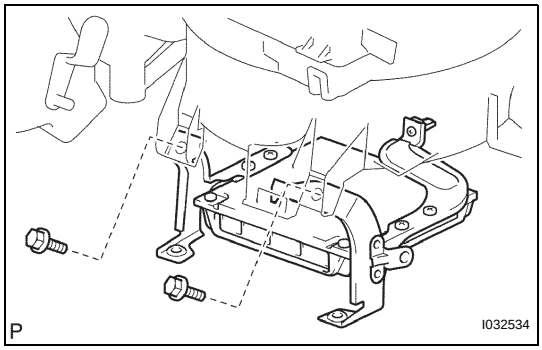

19. REMOVE ECM

(a) Remove the 2 bolts and ECM.

NOTICE:

- **Do not apply excessive force to the connector of the ECM.**
- **Do not give any impact to the ECM.**

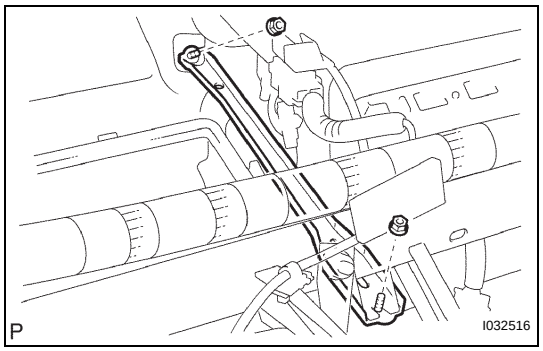

20. REMOVE INSTRUMENT PANEL TO COWL BRACE CENTER

(a) Remove the 2 nuts and instrument panel to cowl brace center.

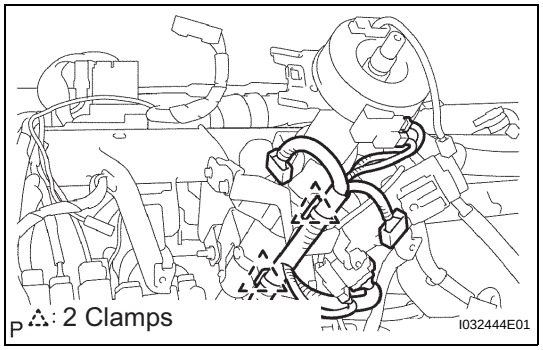

21. DISCONNECT STEERING COLUMN ASSEMBLY

(a) Disconnect the connector and remove the 2 clamps.

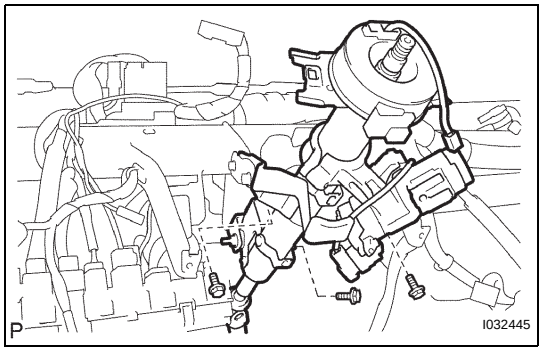

(b) Remove the 3 bolts and disconnect the steering column assembly.

22. REMOVE INSTRUMENT PANEL REINFORCEMENT

(a) Remove the 8 screws and 2 earth wires from the instrument panel reinforcement.

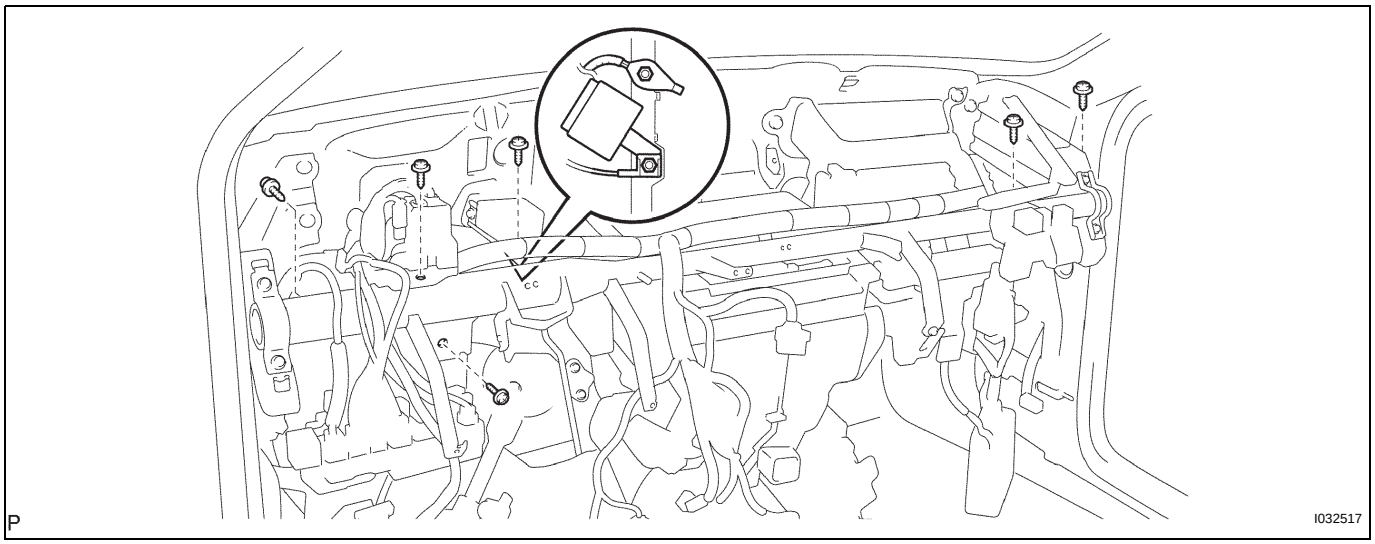

(b) Disconnect the 5 clamps and wire harness.

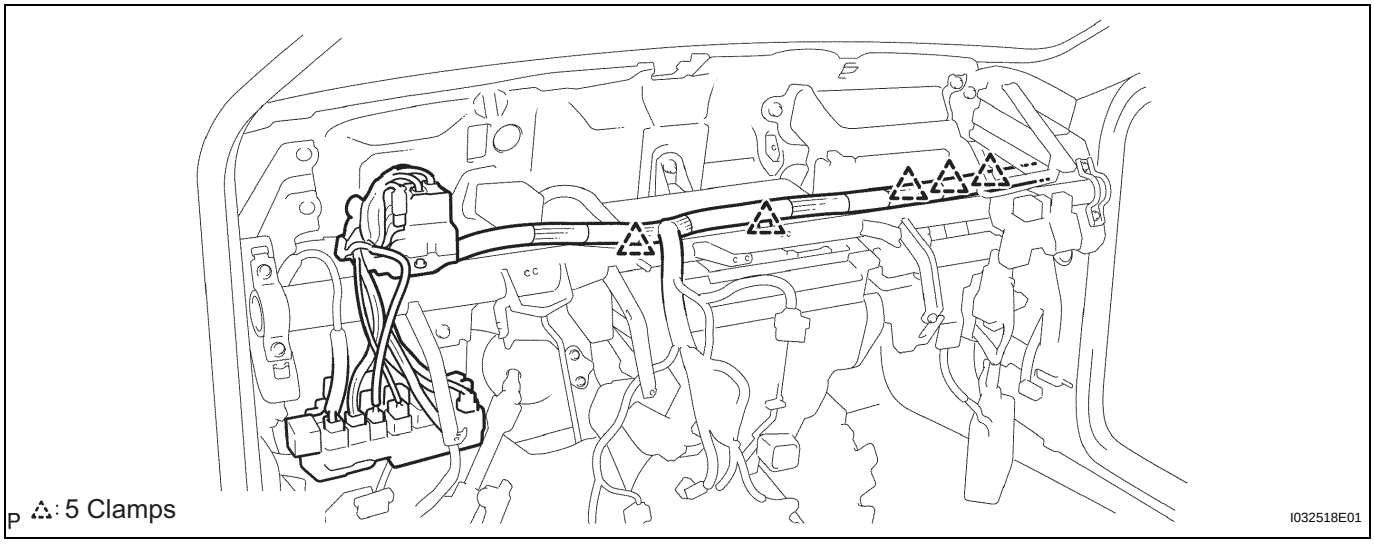

(c) Remove the 6 bolts and instrument panel reinforcement.

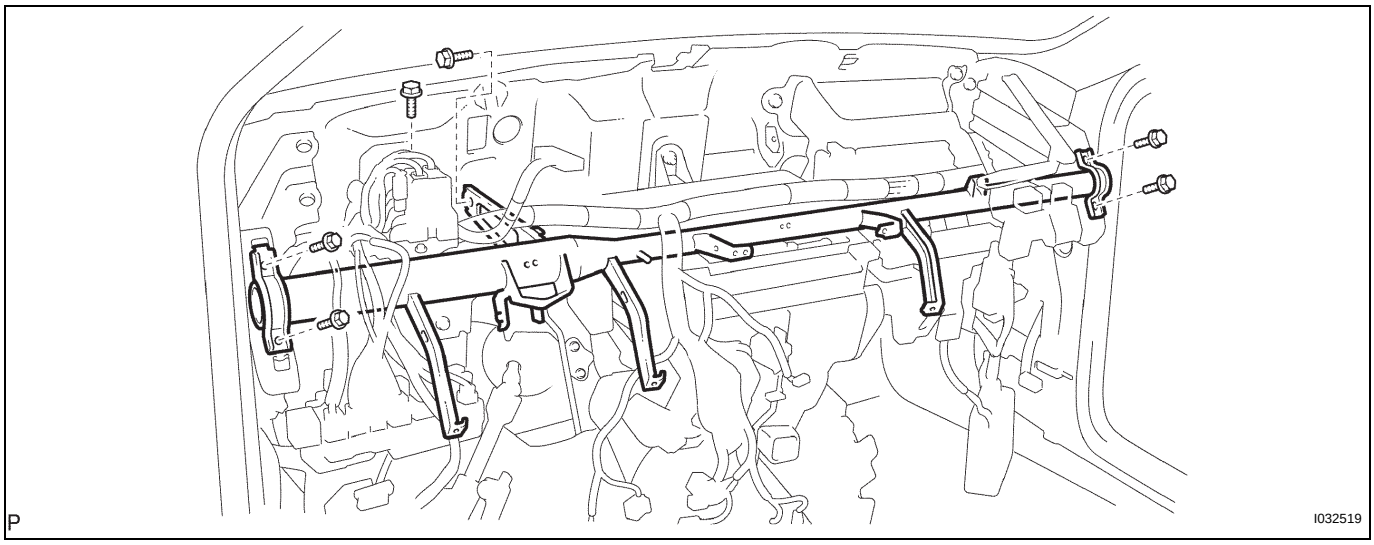

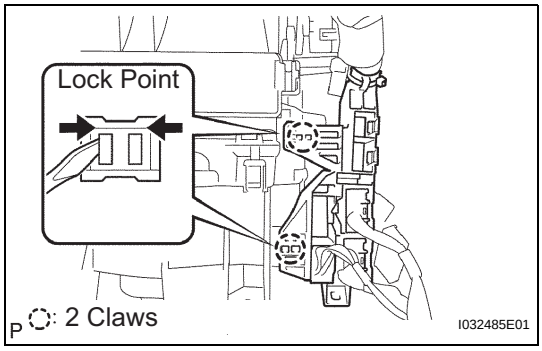

23. REMOVE AIR CONDITIONING UNIT ASSEMBLY

(a) Release the 2 fitting claws and disconnect the connector holder.
HINT:
Release the claw while pressing the lock part in the direction of the arrow.

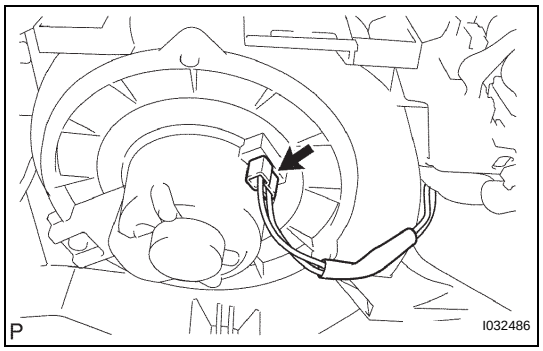

(b) Disconnect the connector from the blower w/fan motor sub-assembly.

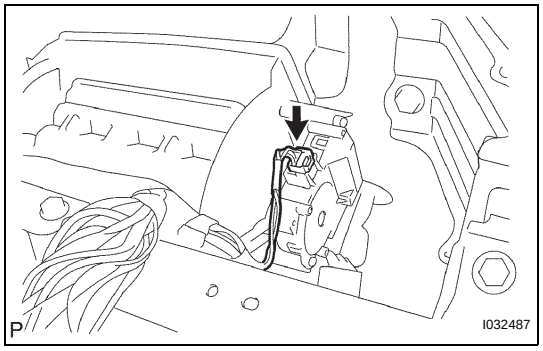

(c) Disconnect the connector from the damper servo sub-assembly.

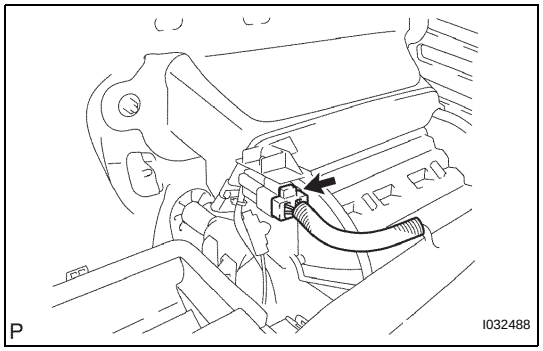

(d) Disconnect the connector from the cooler thermistor No. 1.

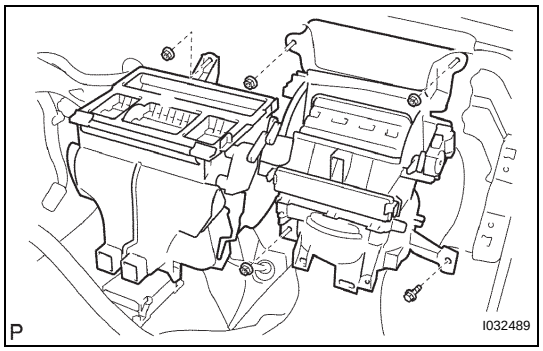

(e) Remove the 4 nuts, bolt and air conditioning unit assembly.

DISASSEMBLY

1. REMOVE AIR FILTER CASE

(a) Release the 2 fitting claws and remove the air filter case.

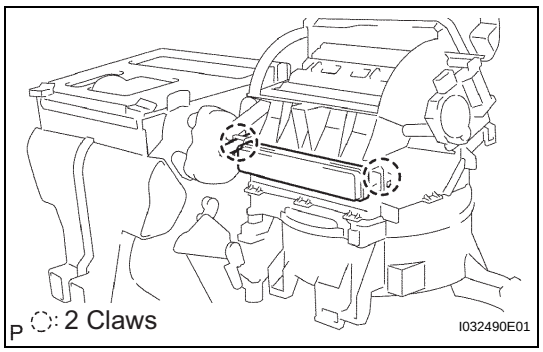

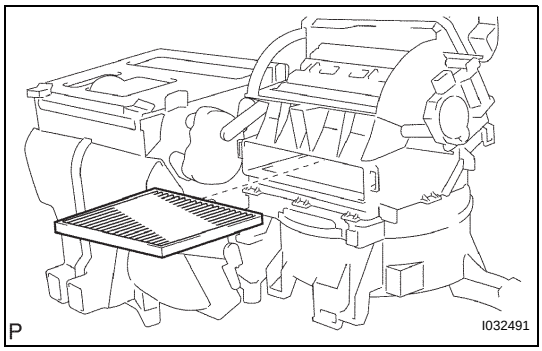

2. REMOVE CLEAN AIR FILTER

(a) Remove the air filter from the air conditioning unit assembly.
HINT:
Removing only the glove compartment door assembly makes it possible to install the air filter.

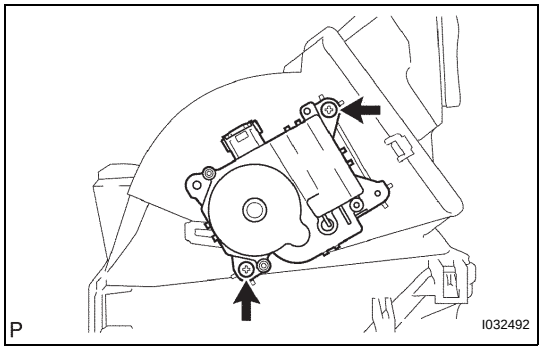

3. REMOVE DAMPER SERVO SUB-ASSEMBLY

(a) Remove the 2 screws and damper servo sub-assembly.
HINT:
Removing only instrument panel sub-assembly upper and heater to register duct No. 1 makes it possible to install the damper servo sub-assembly.

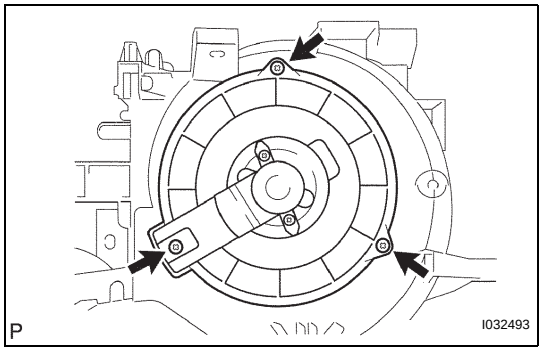

4. REMOVE BLOWER W/FAN MOTOR SUB-ASSEMBLY

(a) Remove the 3 screws and blower w/fan motor sub-assembly.
HINT:
Removing only the ECM makes it possible to install the blower w/fan motor sub-assembly.

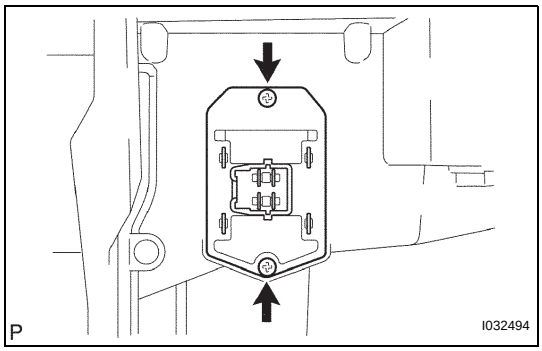

5. REMOVE BLOWER RESISTOR

(a) Disconnect the connector.
(b) Remove the 2 screws and blower resistor.
HINT:
Removing only the ECM makes it possible to install the blower resistor.

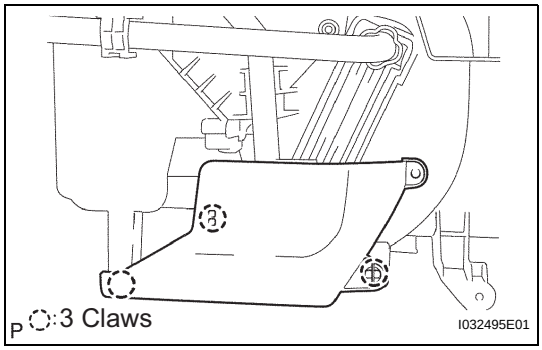

6. REMOVE HEATER PIPING COVER

(a) Release the 3 fitting claws and remove the heater piping cover.

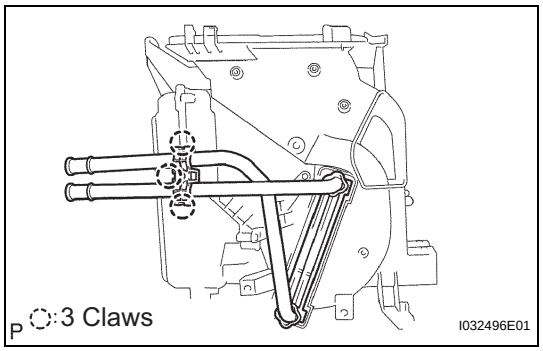

7. REMOVE HEATER RADIATOR UNIT SUB-ASSEMBLY

(a) Release the 3 fitting claws and remove the heater piping clamp and heater radiator unit sub-assembly.

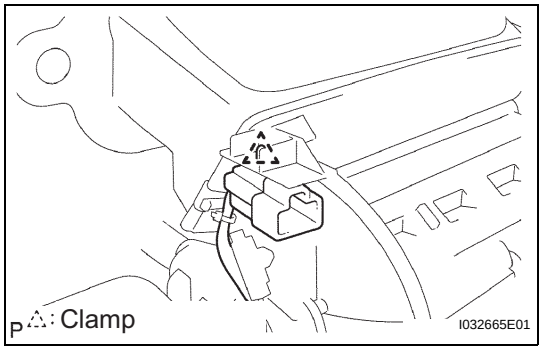

8. REMOVE COOLER THERMISTOR NO. 1

(a) Remove the clamp.

(b) Release the fitting claw and remove the 2 screws and heater case.

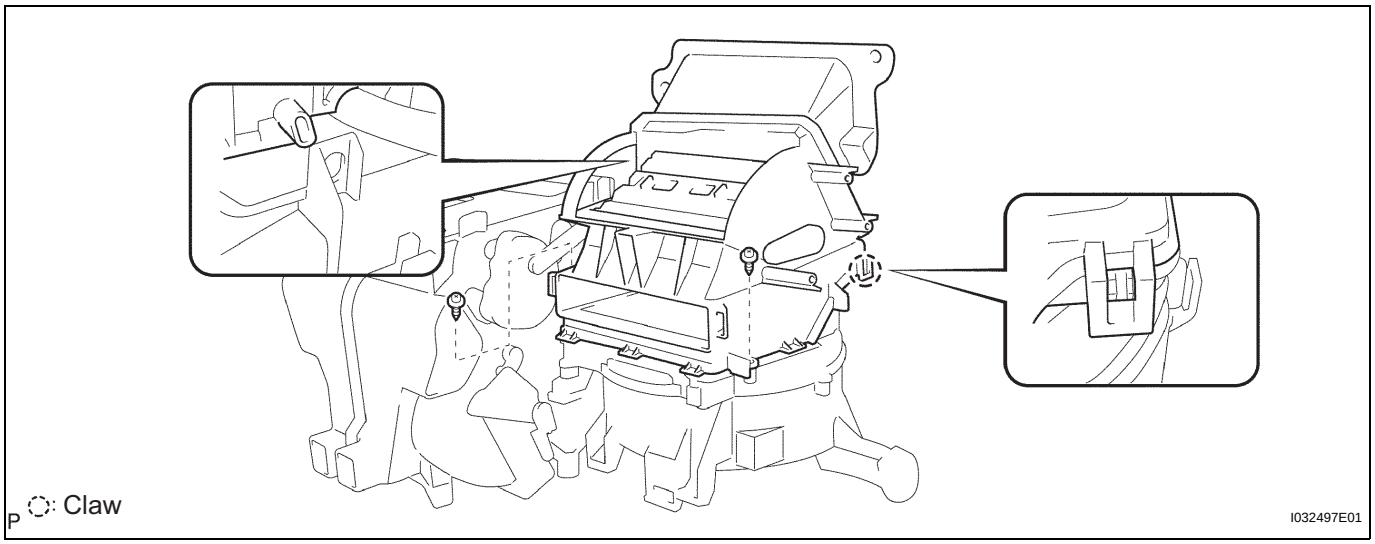

(c) Release the fitting claw and remove the 5 screws and heater case.

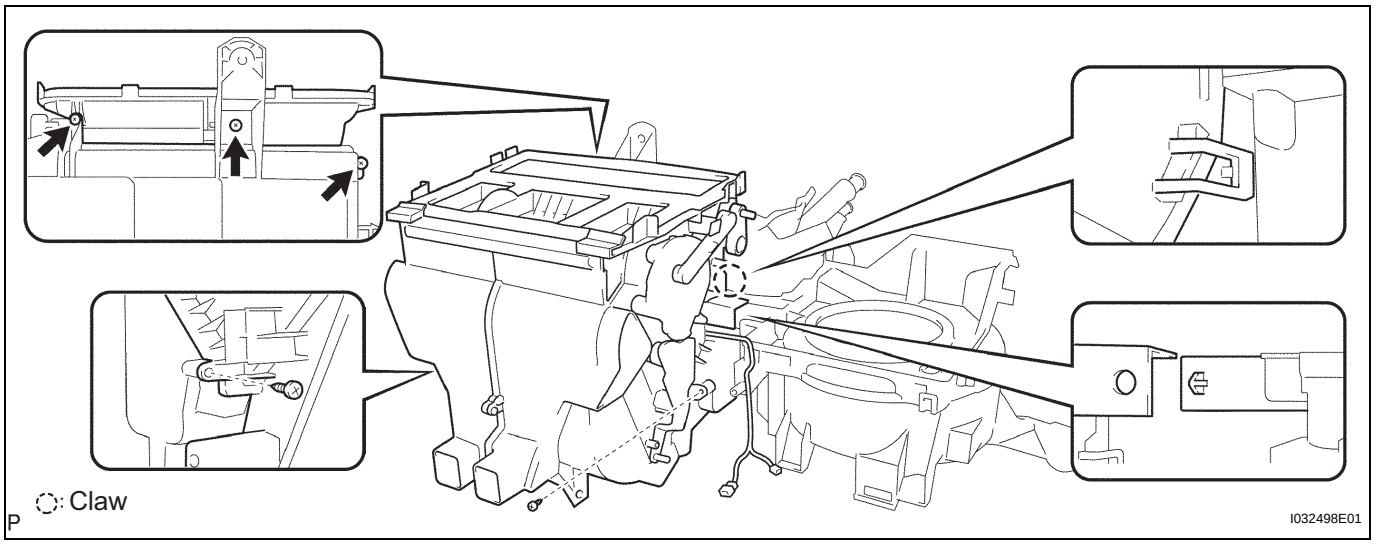

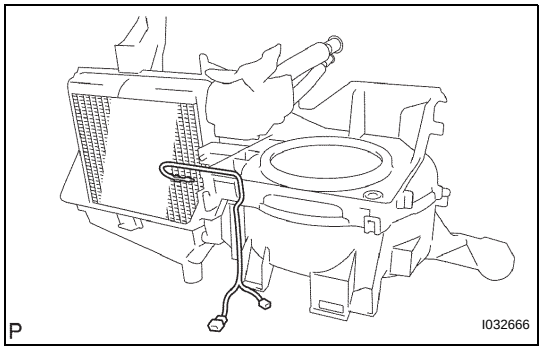

(d) Remove the cooler thermistor No. 1 from the cooler evaporator sub-assembly No. 1.

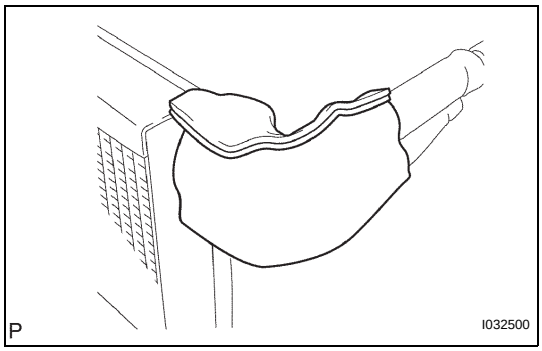

9. REMOVE AIR CONDITIONING TUBE ASSEMBLY

(a) Remove the cooler evaporator assembly from the heater case.

(b) Remove the packing.

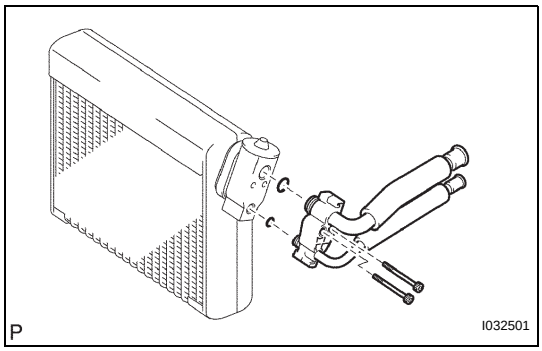

(c) Using a hexagon wrench 5.0 mm (0.20 in.), remove the 2 hexagon bolts and air conditioning tube assembly.

(d) Remove the 2 O-rings from the air conditioning tube assembly.